36" wide

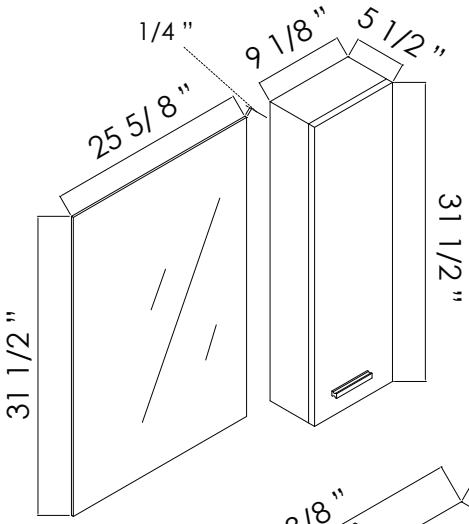

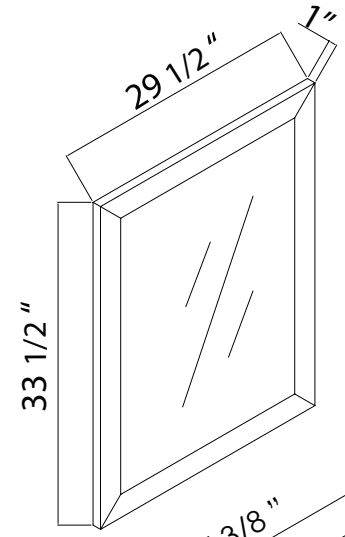

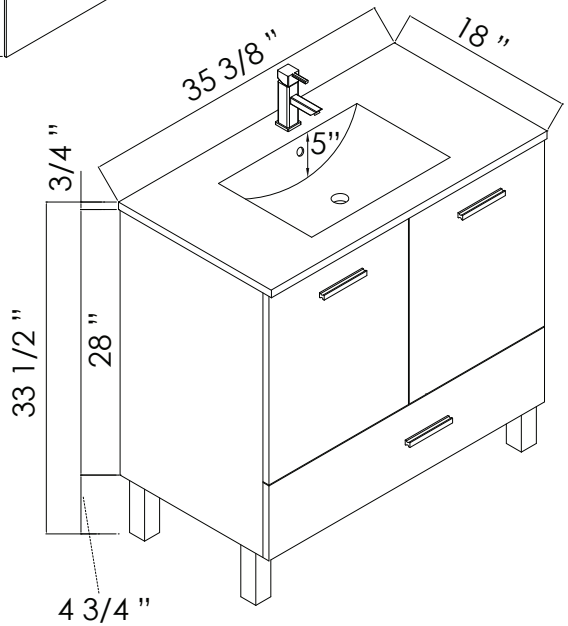

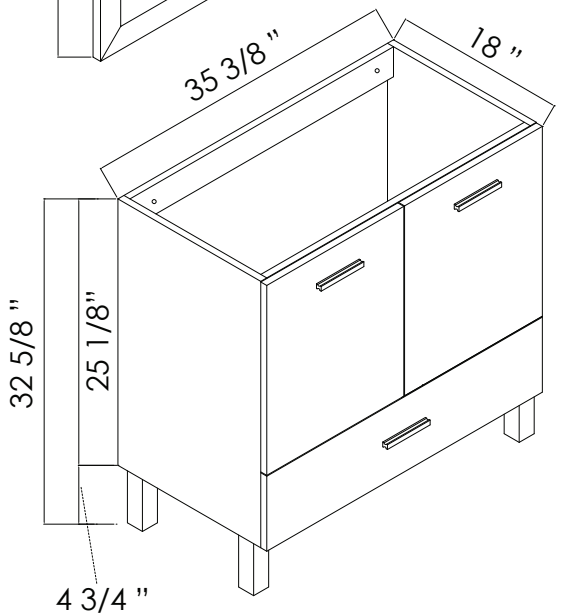

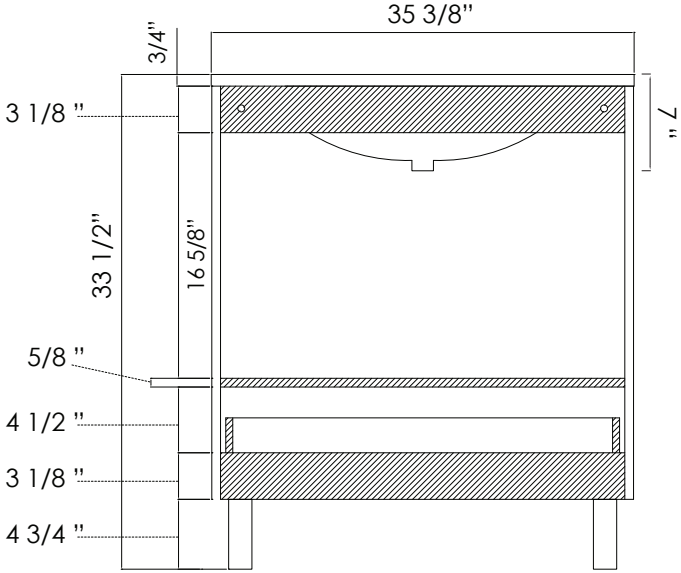

BACK VIEW